Replacing Parts

Product 0 460 494 161 - Distributor injection pump - VE4/9F2400R185

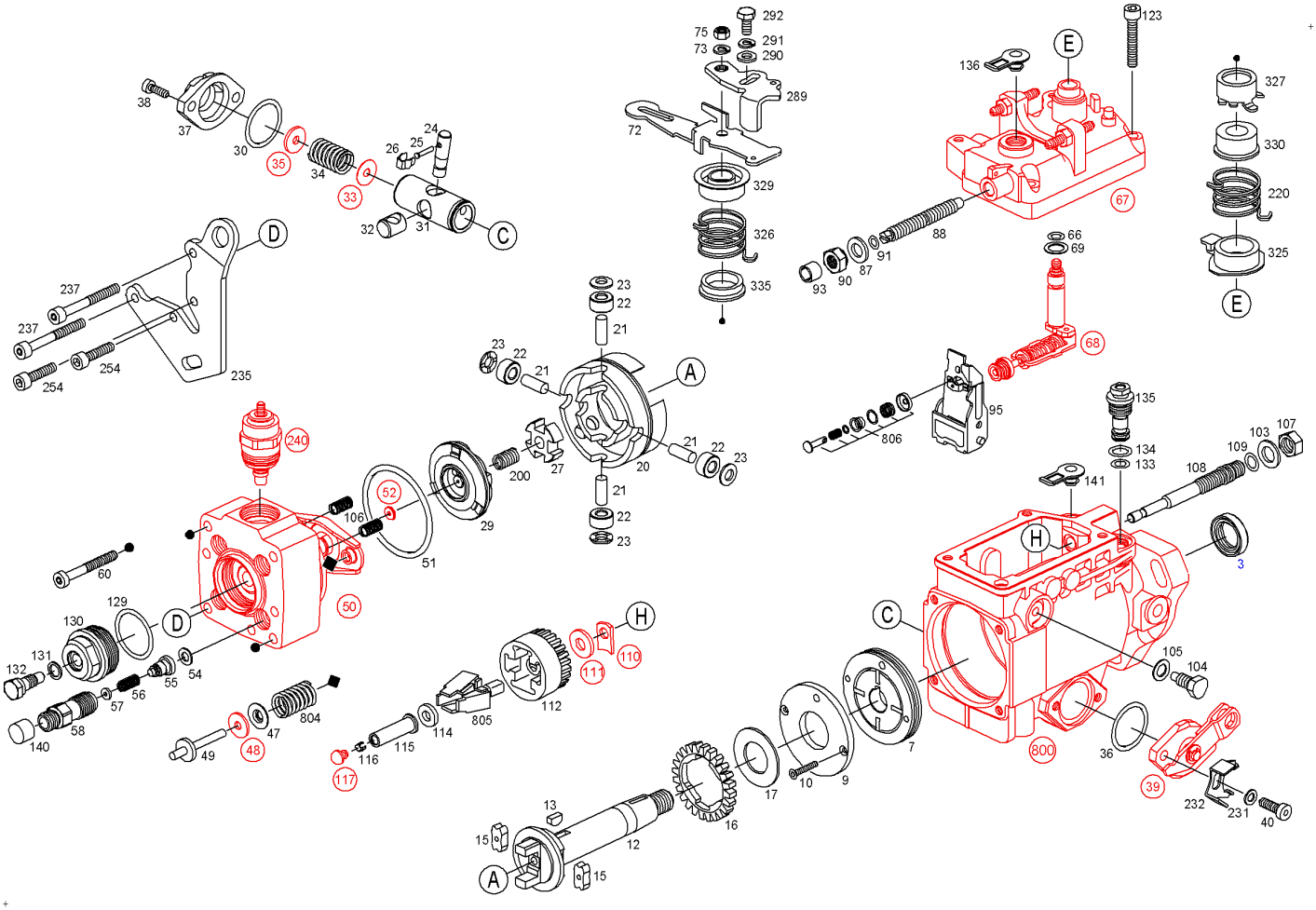

Position	Order number	Info	Quantity	Designation
3	1 460 283 301	A	1	SHAFT SEALING RING
7	1 467 030 307	B	1	SUPPLY PUMP
9	1 460 134 306	B	1	SUPPORT RING
10	2 910 871 131	B	2	COUNTERSUNK-HEAD SCREW, DIN 965 - M4x22-8.8-H
12	1 466 100 305	B	1	DRIVE SHAFT
13	1 460 023 302	B	1	WOODRUFF KEY
15	1 460 056 302	A	2	BUFFER
16	1 466 317 301	B	1	TOOTHED GEAR
17	1 460 102 312	B	1	SLIDING DISK
20	1 460 232 328	B	1	ROLLER RING
21	2 463 100 002	B	4	BEARING PIN
22	2 460 300 005	B	4	ROLLER
23	2 460 120 013	B	4	FRICTION WASHER
24	1 463 103 315	B	1	ADJUSTING PIN

25	1 463 120 359	B	1	RETAINING PIN
26	1 461 310 300	B	1	RETAINING BRACKET
27	1 460 147 006	B	1	CROSS DISK
29	1 466 110 397	A	1	CAM PLATE
30	1 460 210 308	B	1	O-RING
31	1 463 104 358	B	1	TIMING-DEVICE PISTON
32	1 463 218 309	B	1	SLIDING PIECE
33	**1 460 100 902**	**B**	**2**	**SELECTION GROUP SHIM RING**
34	1 464 619 302	A	1	COMPRESSION SPRING, 35,50 MM
35	**1 460 100 902**	**B**	**1**	**SELECTION GROUP SHIM RING**
36	1 460 210 308	B	1	O-RING
37	1 465 530 301	B	1	CLOSING COVER
38	1 463 414 304	B	2	TORX FILLISTER SCREW
39	**1 465 530 400**	**B**	**1**	**FITTING COVER**
40	1 463 414 304	B	2	TORX FILLISTER SCREW
47	1 460 500 303	B	2	SPRING SEAT
48	**1 460 100 902**	**B**	**2**	**SELECTION GROUP SHIM RING**
49	1 463 124 301	A	2	GUIDE PIN
50	**1 468 334 327**	**A**	**1**	**HYDRAULIC HEAD**
51	1 900 210 154	B	1	O-RING
52		**Z**	**1**	**SELECTION GROUP SHIM**
54	1 460 105 305	A	4	GASKET
55	1 468 522 273	A	4	DELIVERY-VALVE ASSEMBLY
56	1 464 613 304	A	4	COMPRESSION SPRING
57	1 460 100 003	A	4	SHIM
58	1 463 370 319	B	4	FITTING
60	1 463 414 303	B	2	CHEESE HEAD SCREW
66	1 460 210 008	B	1	O-RING
67	**1 465 530 538**	**B**	**1**	**HOUSING COVER**
68	**1 463 161 631**	**B**	**1**	**PART LOAD GOVERNOR**
69	1 200 101 640	B	1	SHIM
72	1 461 901 382	B	1	CONTROL LEVER
73	2 916 699 083	B	1	SPRING LOCK WASHER, DIN 128 - A6-FSt
75	2 915 012 007	B	1	HEXAGON NUT, ISO 4032 - M6-8-A
87	2 916 012 015	B	1	PLAIN WASHER, DIN 433 - 8,4-160 HV
88	1 463 402 320	B	1	ADJUSTING SCREW
90	2 915 041 001	B	1	HEXAGON NUT, DIN 936 - M8x1-04-A
91	1 900 210 101	A	1	O-RING
93	1 460 410 302	A	1	SPACER SLEEVE
95	1 461 902 597	B	1	FULCRUM LEVER
103	2 916 012 017	B	1	PLAIN WASHER, DIN 433 - 10,5-160 HV
104	1 463 452 313	B	2	SLOTTED SHOULDER SCREW
105	1 460 105 304	B	2	GASKET
106	1 464 613 301	B	2	COMPRESSION SPRING
107	1 463 300 304	B	1	HEXAGON NUT
108	1 463 590 317	B	1	GOVERNOR SHAFT
109	1 900 210 104	B	1	O-RING

110	**1 461 030 901**	**B**	**1**	**SELECTION GROUP SHIM PLATE**
111	**1 460 100 927**	**A**	**1**	**SELECTION GROUP SUPPORTING DISK**
112	1 466 317 319	B	1	FLYWEIGHT ASSEMBLY
114	1 460 100 370	B	1	SHIM RING
115	1 460 422 346	B	1	SLIDING SLEEVE
116	1 461 290 301	B	1	LOCKING PLATE
117	**1 463 203 905**	**B**	**1**	**SELECTION GROUP**
123	2 910 142 207	B	4	HEX-SOCKET-HEAD CAP SCREW, ISO 4762 - M6x35-8.8
129	1 460 210 316	B	1	O-RING
130	1 463 461 314	B	1	SCREW PLUG
131	1 460 105 306	B	1	FLAT SEAL RING
132	1 463 453 306	B	1	BLEEDER SCREW
133	1 460 210 015	B	1	O-RING
134	1 460 210 007	A	1	O-RING
135	1 460 362 301	B	1	CONTROL VALVE
136	1 460 516 001	B	1	PLUG
140	1 460 508 304	B	4	PROTECTIVE CAP
141	1 460 516 001	B	1	PLUG
200	1 464 613 303	B	1	COMPRESSION SPRING
220	1 464 651 346	A	1	COILED SPRING
231	2 916 012 014	B	1	PLAIN WASHER, DIN 125 - A6,4-160 HV
232	1 461 329 314	B	1	STOP
235	1 461 332 314	B	1	BRACKET
237	1 463 414 305	B	2	TORX FILLISTER SCREW
240	**0 330 001 018**	**B**	**1**	**PUSHING ELECTROMAGNET**
254	2 910 142 203	B	2	HEX-SOCKET-HEAD CAP SCREW, ISO 4762 - M6x25-8.8
289	1 461 900 466	B	1	CONTROL LEVER
290	2 916 012 014	B	1	PLAIN WASHER, DIN 125 - A6,4-160 HV
291	2 916 699 083	B	1	SPRING LOCK WASHER, DIN 128 - A6-FSt
292	2 911 062 202	B	1	HEXAGON SCREW, ISO 4017 - M6x22-8.8-A
325	1 460 522 306	B	1	SPRING SEAT
326	1 464 651 346	A	1	COILED SPRING
327	1 460 422 340	B	1	STOP
329	1 460 522 302	B	1	SPRING SEAT
330	1 460 522 305	B	1	SPRING SEAT
335	1 460 522 303	B	1	SPRING SEAT
800	**1 465 130 942**	**B**	**1**	**ASSEMBLY OF SERVICE PARTS PUMP HOUSING**
804	1 467 010 053	B	1	PARTS SET COMPRESSION SPRING
805	1 467 010 054	B	1	PARTS SET FLYWEIGHT
806	1 467 010 346	B	1	PARTS SET RETAINING PIN

Explanations

A	Wear part
B	Service part
Z	Not a service part