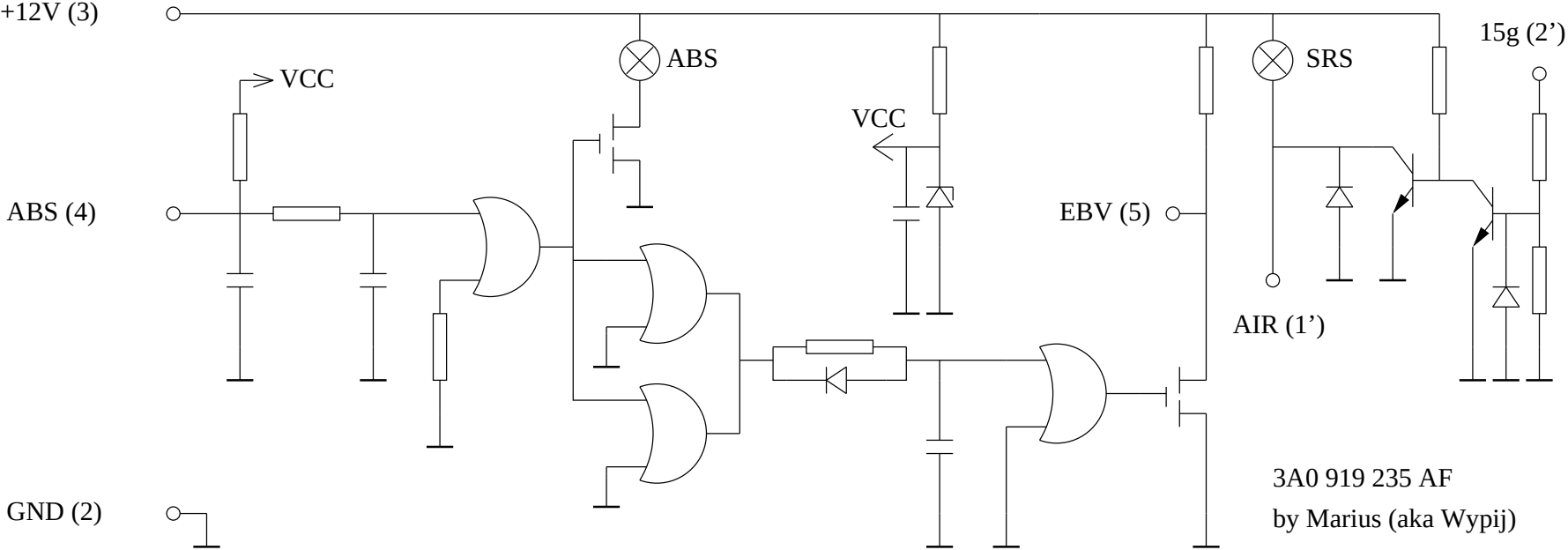
+12V (3)
VCC
ABS
VCC
SRS
15g (2')
ABS (4)
EBV (5)
AIR (1')
GND (2)
3A0 919 235 AF
by Marius (aka Wypij)