ESP system components, removing and installing
ESP sensor unit -G419-, vehicles from my 02.02, removing and installing

The Sensor for transverse acceleration -G200-, the Sender for rotation rate -G202- and the Longitudinal acceleration sensor1) -G251- are assembled together in one housing on a new bracket, at the same place in the vehicle.

1) 4Motion vehicles with Haldex clutch only

- → The ESP-sensor unit -G419- -1- is secured with a bracket on the steering column bearing bracket -a-.

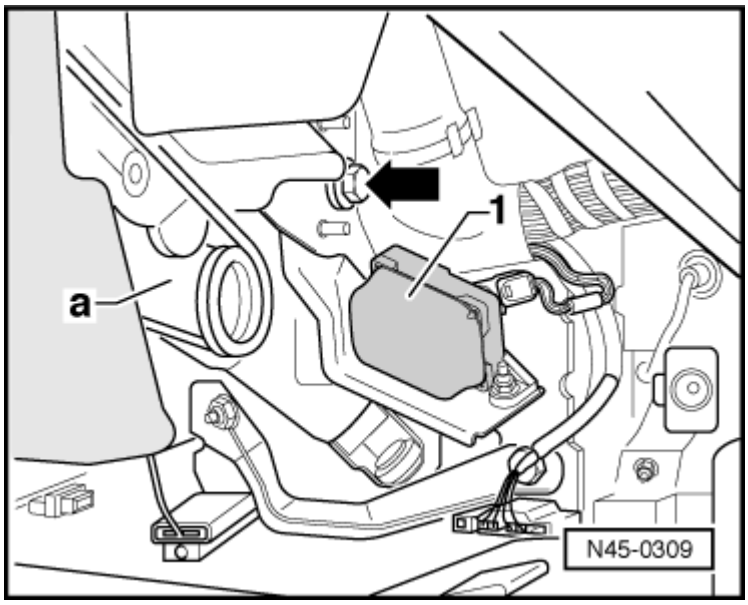

When the ESP-sensor unit -G419- is replaced, a zero compensation of the sensor for transverse acceleration -G200-, the sender for rotation rate -G202, and thelongitudinal acceleration sensor1) -G251- must be performed.

1) 4Motion vehicles with Haldex clutch only

Removing

- → Disconnect connector -arrow- from ESP-sensor unit -G419-
- Unscrew bolt -1- and remove ESP-sensor unit -G419-

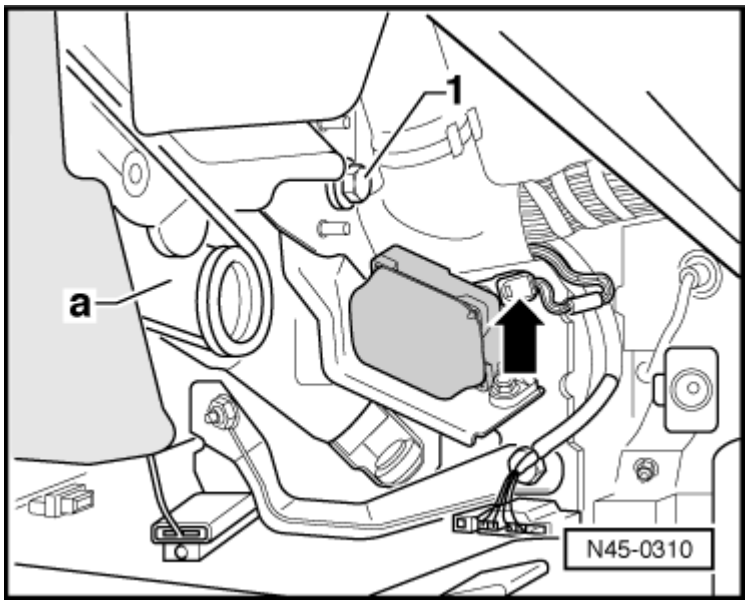

- → Remove nuts -a- from the ESP-sensor unit -G419-
- Remove ESP-sensor unit -G419-

CAUTION!
Sharp shaking motions can destroy the Sensor for transverse acceleration -G200-, Sender for Rotation Rate -G202- and Longitudinal Acceleration Sensor 1)-G251-.

Installing

Installation in reverse order

Tightening torques:		
ESP-sensor unit -G419- to bracket	9 Nm	(79.7 in. lb)
Hex bolt to steering column mounting bracket	20 Nm	(15 ft. lb)

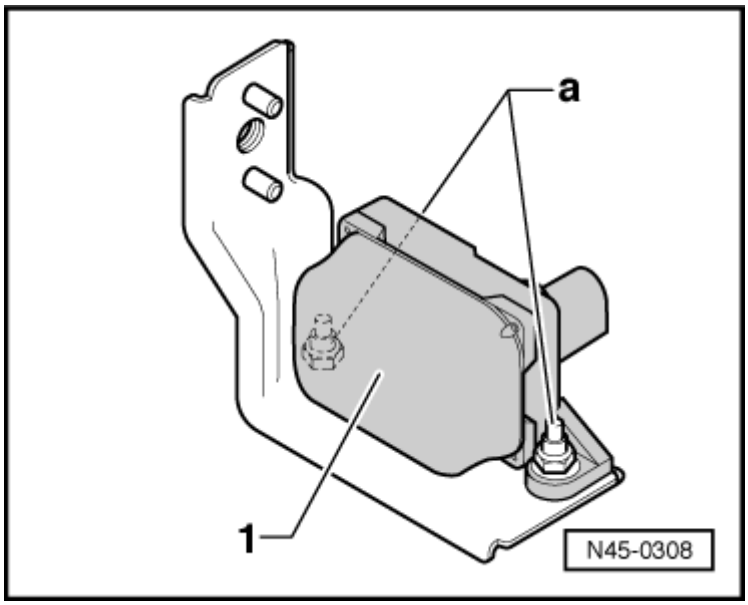

- Enter radio code.
- Perform basic settings of sensor for transverse acceleration -G200-, sender for rotation rate -G202- and longitudinal acceleration sensor1)-G251-.
- Connecting VAS 5051 and selecting functions => page 45-38

1) 4Motion vehicles with Haldex clutch only